Expt. 3

γ - Spectrometer.

(SCA)

(c)

1. GENERAL INFORMATION

1.1 SCOPE

Para Nuclear Spectrometer Model **PNS-2** is a micro-contr[illegible] economical, stand alone, portable, mains operated instrument for NaI(Tl) type PMT ba[illegible] Nuclear Detector though it can be used for other Nuclear Detectors as well. This setup [illegible] suitable for NaI(Tl) type detectors with PMT, based experiments such as absorption studies [illegible] also be used for gross beta / gamma counting of environmental samples.

PNS-2 can store 1000 readings in a non-volatile memory. These readings can be downloaded to PC via RS-232 interface or printed on printer via parallel interface or can be viewed on LCD.

Model **PNS-2** is ideally suited for Nuclear Experiments carried out in University and colleges. It is also useful for radiation counting for Health Physics applications in radioisotope laboratories, nuclear reactors, nuclear power plants, and nuclear medicine centers etc.

1.2 DESCRIPTION

Model **PNS-2** has following functional blocks

a) NaI(Tl) / PMT Detector (optional)
b) High Voltage Supply
c) Spectroscopy Amplifier
d) Single channel Analyzer
e) Micro controller with RTC and Memory
f) LCD Menu Display & Keypad
g) Printer Output
h) PC Interface

1.2.1 NaI (Tl) Detector with Photo Multiplier Tube

Para Nuclear Spectroscopy Model **PNS-2** can be coupled to any standard NaI (Tl) detector which is a standard 2 Inch Dia 2 Inch long NaI (Tl) crystal integrally mounted on a 14 Pin PMT. This detector is supplied as an option. Any similar detector can be used in place of this detector. PMT based preamplifier is also supplied as part of Model PNS-2. The necessary low voltage supply (±15V) is made available on the 3 Pin metal make connector. Signal, HV and LV supply cables are also supplied with the counting Unit. The preamplifier output is fed to input of Spectroscopy amplifier.

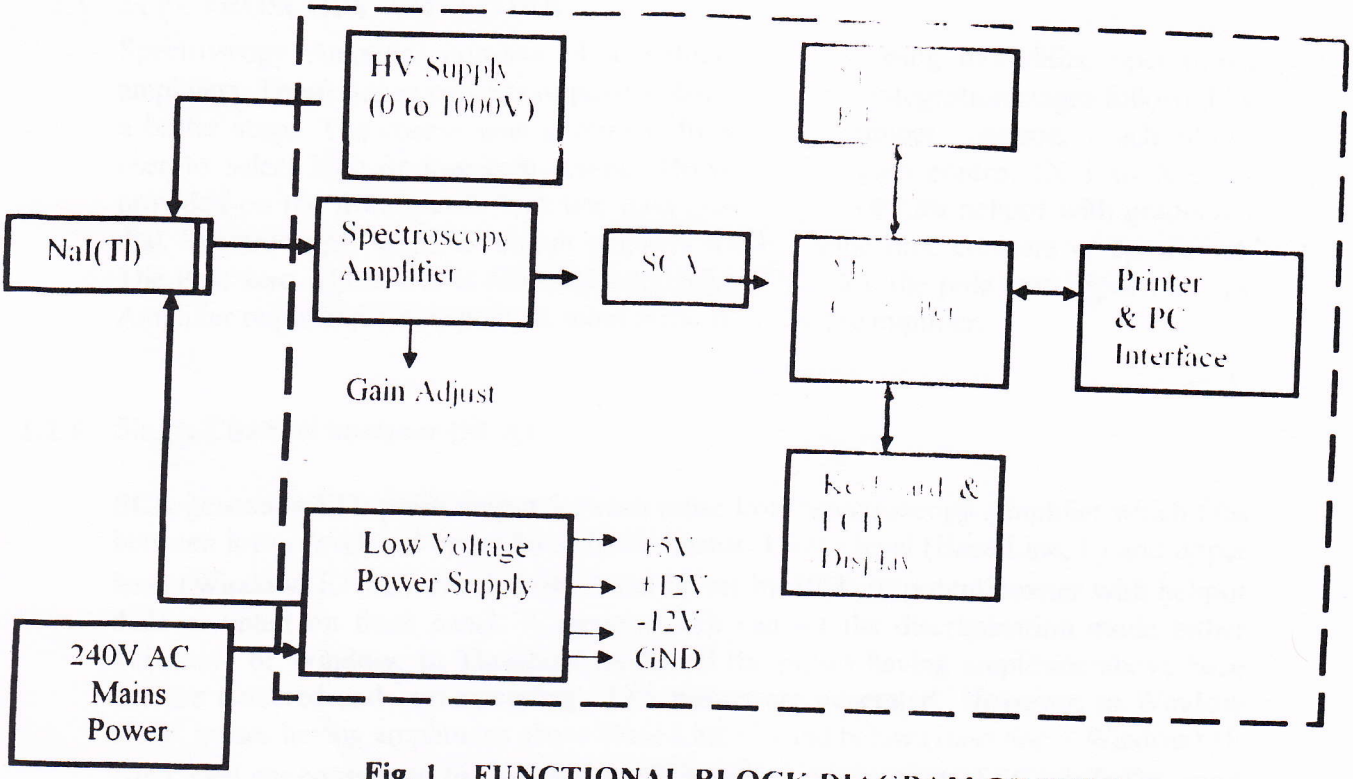

Fig. 1 FUNCTIONAL BLOCK DIAGRAM OF PNS-2

1.2.2 H.V. SUPPLY

The High voltage (0 to +1000 Volts) is necessary to operate NaI(Tl) / PMT detector in Model **PNS-2**. This voltage is continuously adjustable to +1000 volts using helipot with graduated dial mounted on the front panel. (It is possible to set the HV supply for different type PMT from different manufacturers and to select proper operating voltage.)

The H.V. supply is a dc-to-dc converter using epoxy molded ferrite transformer. High voltage output up to +1000 Volts is filtered through 1M/0.01 Microfarad RC filter for minimum ripple content

Current amplifier and ferrite core are the center point of the H. V. Supply design. Ferrite core transformer is designed to work with oscillator and to provide continuously variable high voltage from 0 to + 1000 Volts at approximately 0.1 mA load current.

High Voltage is connected to PMT through a load resistor.

Warning

Fatal High Voltages are exposed when the instrument is opened. Switch off power and wait for 30 seconds before touching inside components.

1.2.3 SPECTROSCOPY AMPLIFIER

Spectroscopy Amplifier consists of a 5-stage [illegible] using monolithic operational amplifiers. These stages consists of passive differ[illegible] integration stages followed by a buffer stage. The coarse gain control is by [illegible] jumper selection, which allows user to select high or low gain setting. How[illegible] gain control (X 1 to X 2) is provided on the front panel. This fine gain cont[illegible] 10-turn helipot with graduated dial. Spectroscopy Amplifier circuit employs fixed shaping time constant of 2μ second. The Pole zero adjustment is provided internally to optimize the pole zero. Spectroscopy Amplifier requires positive polarity input pulse from the preamplifier.

1.2.4 Single Channel analyser (SCA)

SCA generates TTL pulse output for each pulse from Spectroscopy Amplifier which falls between lower level and upper level discriminator. Lower level (Base Line, E) and upper level (Window, E+ δE) discriminators can be set by 10 Turn potentiometer with helipot dials mounted on front panel. A mode switch can set the discrimination mode either Threshold or Window. In Threshold mode, all the pulses having amplitude above base line are detected and corresponding TTL pulses are generated. However, in Window mode, pulses having amplitudes above Base Line (E) and below (Base line + Window) (E +δE) level are considered to generate the TTL pulses. The output of SCA is fed as input to a Counter (PF8583)

1.2.5 MICRO-CONTROLLER

Model **PNS-2** uses Atmel make 8-bit micro-controller type 89C55WD. Real Time Clock, a 6 digit Counter and 64KB EEPROM are additional I^2C logic devices interfaced to the micro-controller.

1.2.6 LCD MENU DISPLAY & KEY PAD

The 16 characters x 2-line large display with backlit and wide viewing angle LCD display helps user to communicate with Model **PNS-2** and set the parameters by using keypad.

Panel embedded 4 keys are used for setting up various parameters and controlling the acquisition, data recall and other operations. All the 4 keys carry different significance during the operation. Displayed Character on LCD, just above each key shows the function of that key. For example > symbol indicates that pressing of this key will advance the cursor to next position of the displayed number.

1.2.7 PRINTER OUTPUT

Model **PNS-2** generates formatted output for printing on centronics parallel printer Printer port 25 pin D male connector on the rear panel is for connecting it to any standard centronics parallel printer to produce hard copy of result of an experiment.

1.2.8 PC INTERFACE

Model **PNS-2** generates formatted serial output for data transfer to PC on COM or Serial Port COM port/ 9 pin D male connector on the rear panel is for connecting it to PC for transferring the data to PC. Support Windows XP based software for data transfer to PC in Windows environment, is provided with Model **PNS-2**.

2. SPECIFICATIONS

ELECTRONICS	: All solid state [illegible] Controller based design.
PRESET TIMER	: Settable betwe[illegible] to 9999 seconds in steps of 1 micro second
NUMBER OF RUNS	: Settable betwe[illegible] to 1000.
DISPLAY	: **Counts :** 999999 **Time :** 9999 **Runs :** 1000
PREAMPLIFIER (OPTIONAL)	: Para Make NE15-0 or Equivalent 14 Pin PMT base Preamplifier
SPECTROSCOPY AMPLIFIER	: Gain – x 1 or x 2 by the Ten turn Helipot with graduated dial Input Polarity – Positive Output – Positive Polarity (0 to 10 V) pulse Output pulse – near Gaussian shape
SINGLE CHANNEL ANALYZER	: Base Line (E) – 0.1 to 10 V Adjustable by helipot with graduated dial Window (δ E) – 0.1 to 2 V Adjustable by helipot with graduated dial Mode – Integral or Window Input – Unipolar Positive pulse Output – TTL Pulse of Width 1μSec (approx)
HV SUPPLY	: Adjustable to +1000V by setting the helipot with graduated dial (10.00 Dial Setting = 1000 Volts)
DATA STORAGE	: Store and recall facility for data up to 1000 readings
USER INTERFACE	: 4 keys keypad with 16x2 line LCD for displaying Key function
DATA TRANSFER	: **For PC** :.RS232 COM Port **For Printer :** Centronics Parallel Port

GENERAL

ELECTRICAL

POWER : 230V AC (±10%), 50 Hz

MECHANICAL

DIMNESIONS : 230L X 200D X 130H mm

WEIGHT : Approximately 3 kg